O.Berk
Leaders in Packaging Solutions

How can we help?

N1004889

50CC WHITE PHARMA ROUND HDPE WITH 33-400 NECK FINISH

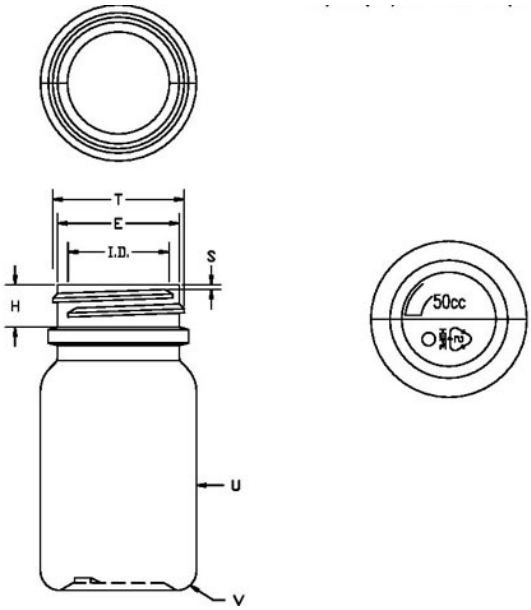

Carton Count
1100

Size
50.00 CC

Overflow Capacity
64.00 cc

Neck Diameter
33.00

Neck Finish
400

Material
HDPE

Color
WHITE

Shape
ROUND

Item Weight
8.00 g

Item Height x Width/Diameter
2.85 in x 1.5 in

Blow Technology
EXTRUSION

O.BERK® Co. provides a full range of packaging products and services for every aspect of the packaging process from conception and selection of a container and closure, through its decoration and delivery. We can help create broad differentiation through innovative packaging using either stock or designed components.